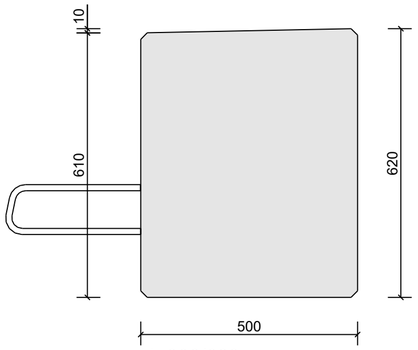

H=300/620

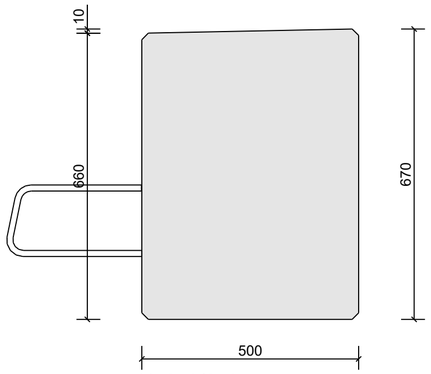

H=350/670

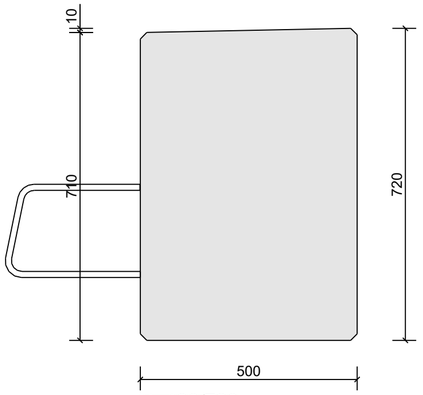

H=400/720

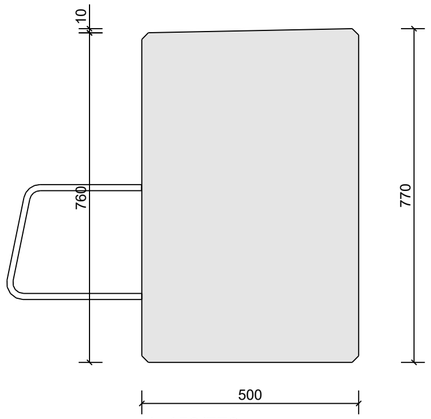

H=450/770

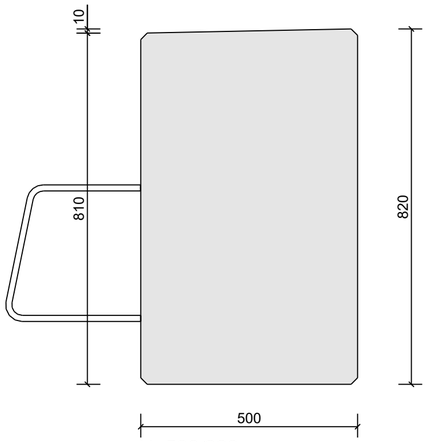

H=500/820

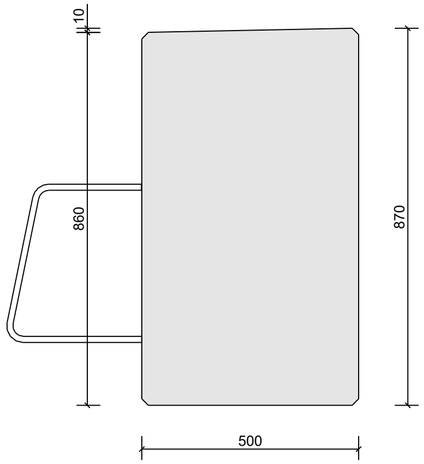

H=550/870

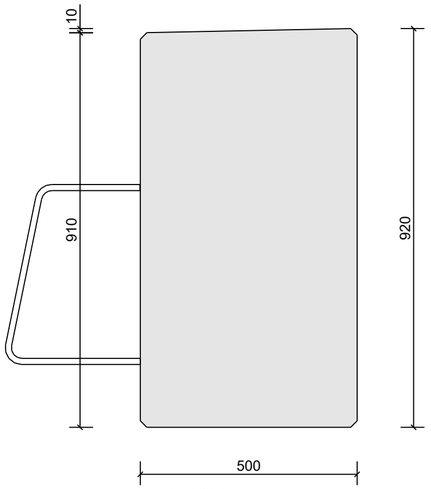

H=600/920

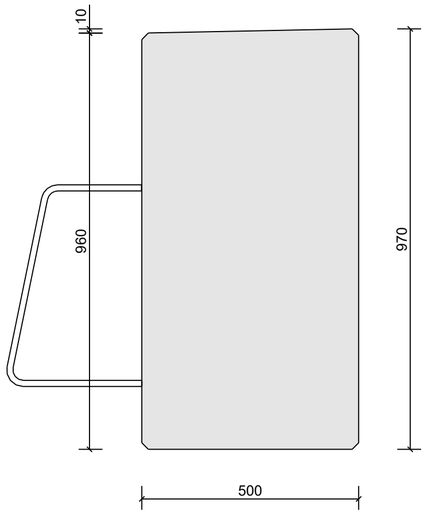

H=650/970

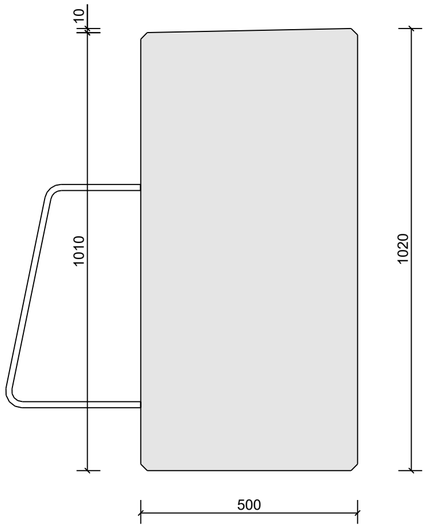

H=700/1020

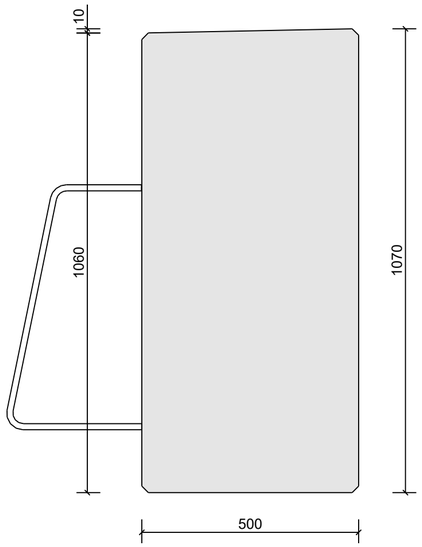

H=750/1070

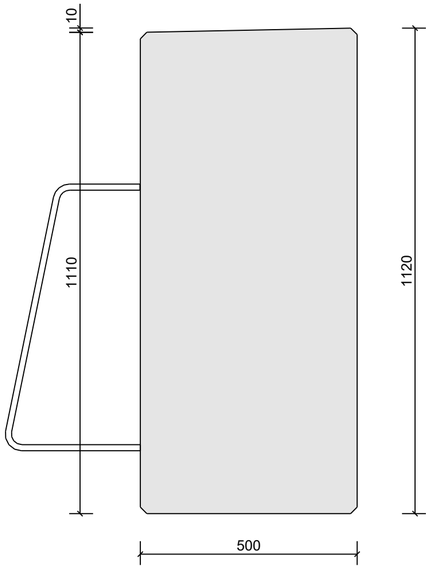

H=800/1120

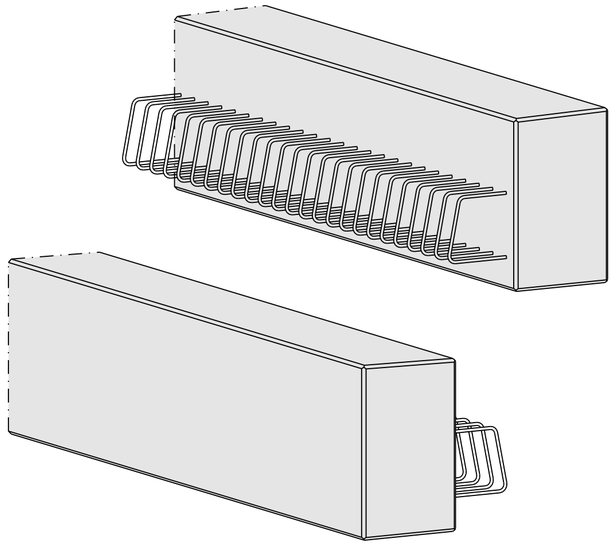

- Getekende vellingkanten 15x15mm
- Toog randligger niet getekend

Randliggertype:
ROA

romein

Tekla Structures

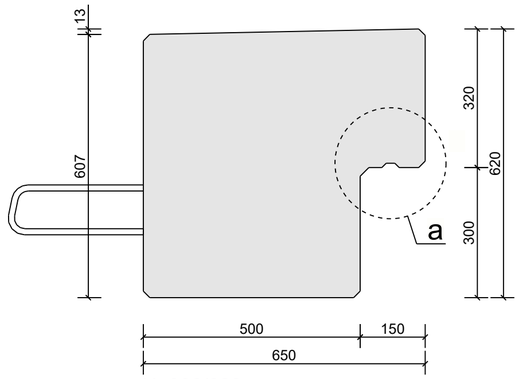

H=300/620

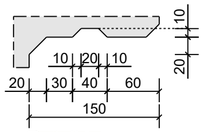

Detail a

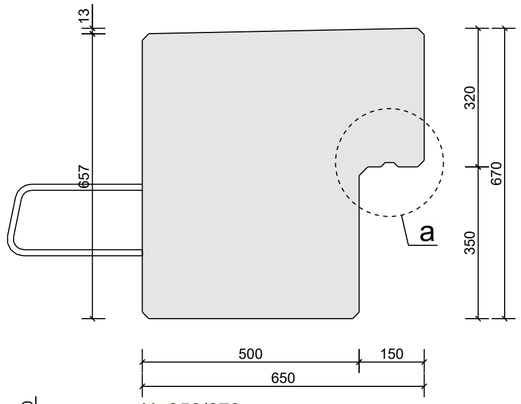

H=350/670

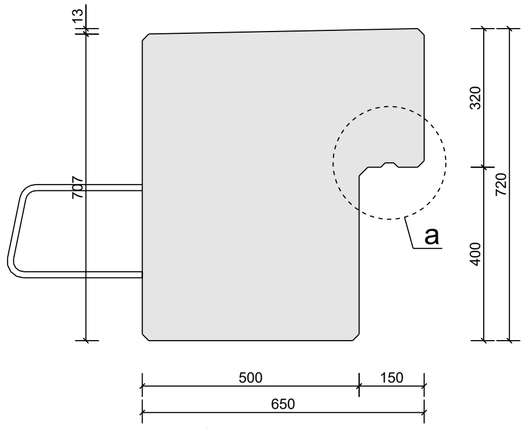

H=400/720

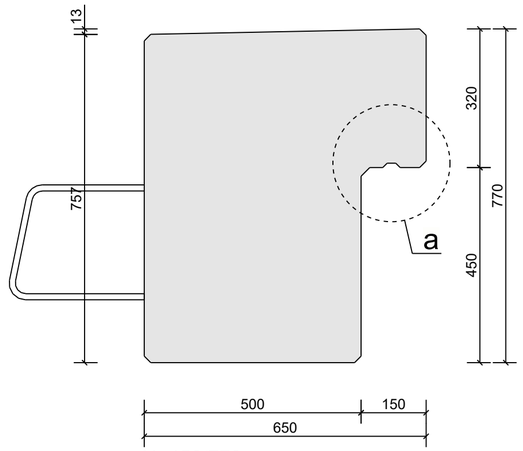

H=450/770

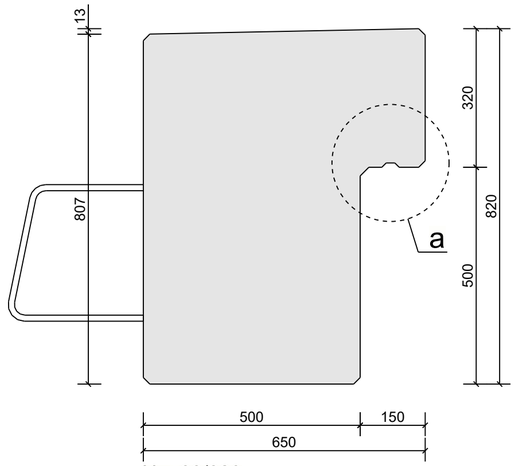

H=500/820

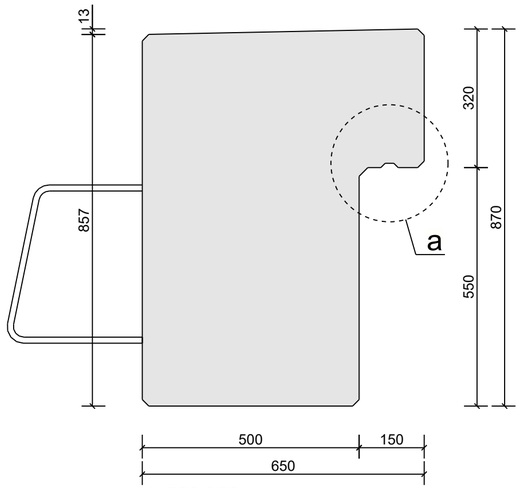

H=550/870

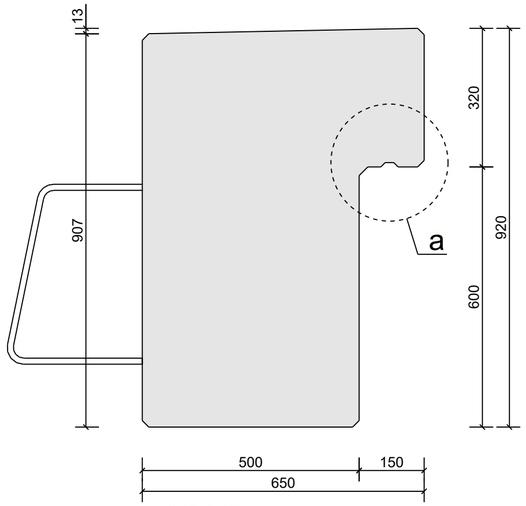

H=600/920

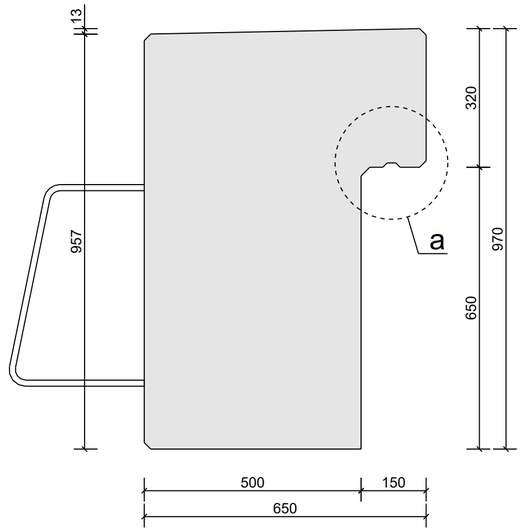

H=650/970

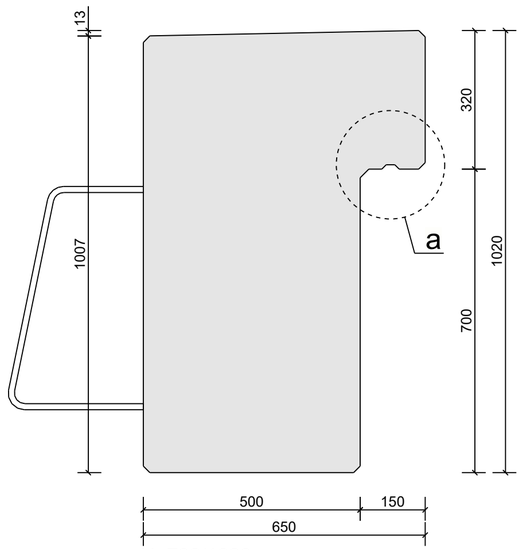

H=700/1020

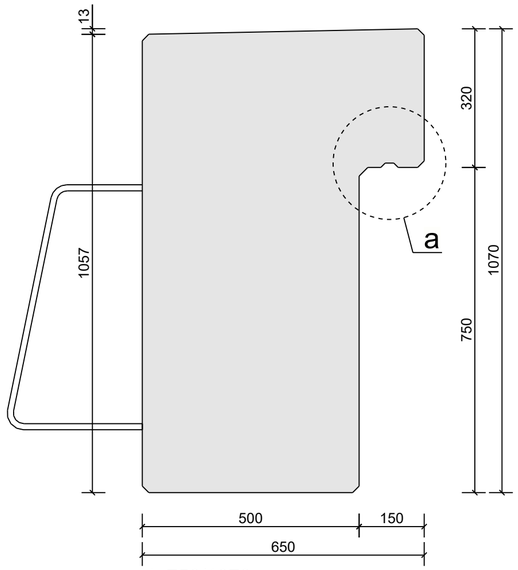

H=750/1070

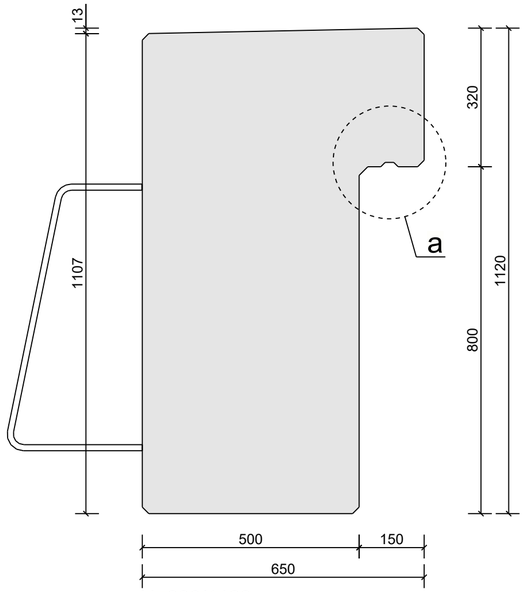

H=800/1120

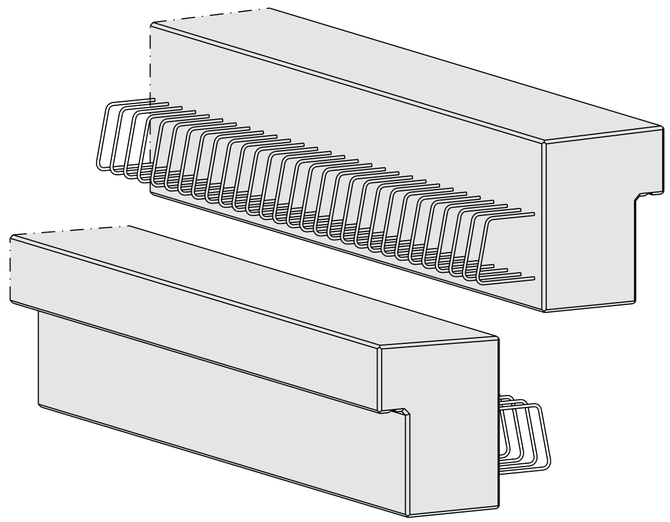

- Getekende vellingkanten 15x15mm
- Toog randligger niet getekend

Randliggertype:

ROB

romein

Tekla Structures

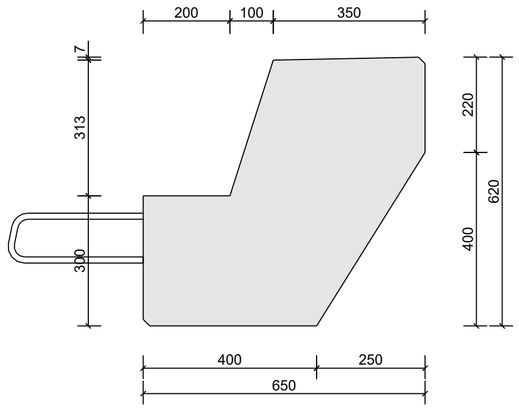

H=300/620

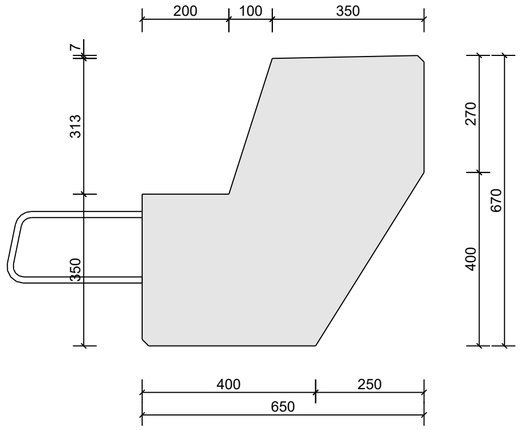

H=350/670

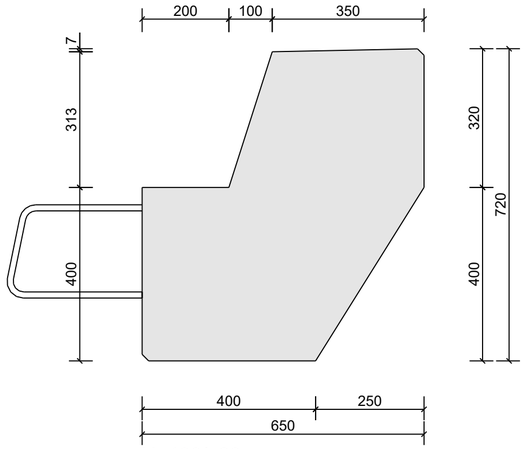

H=400/720

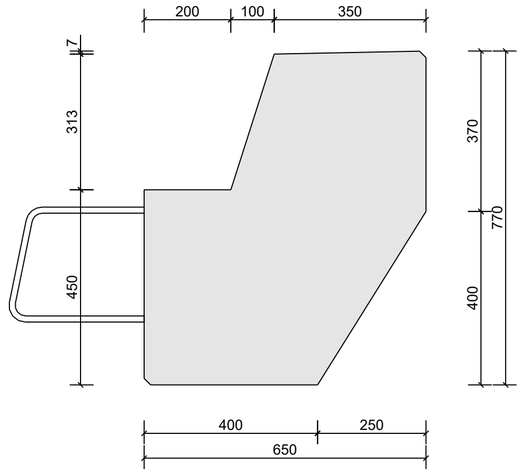

H=450/770

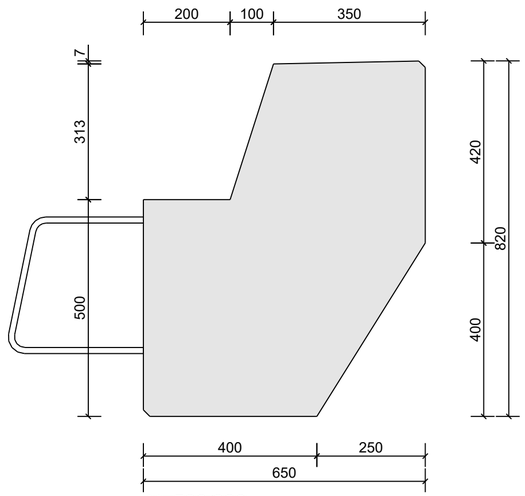

H=500/820

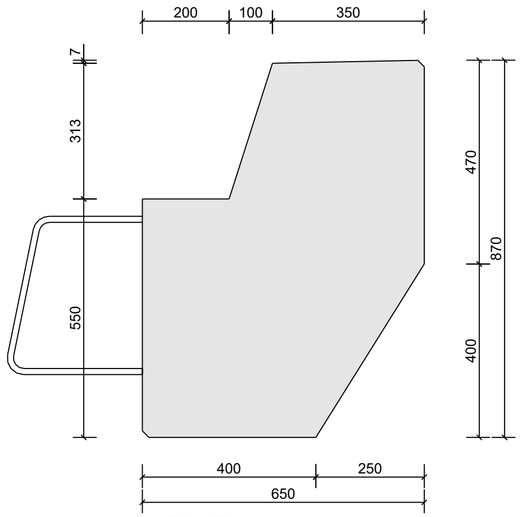

H=550/870

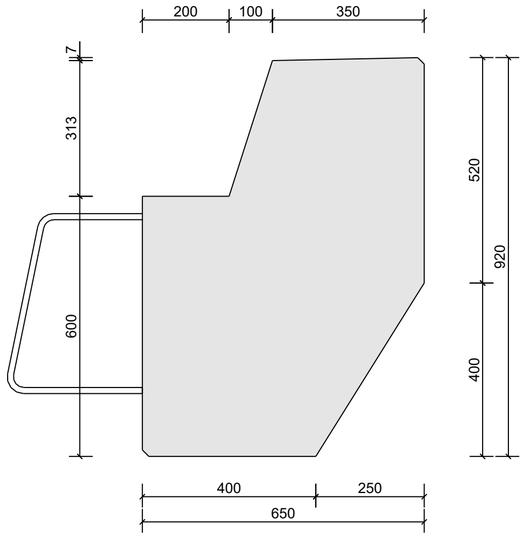

H=600/920

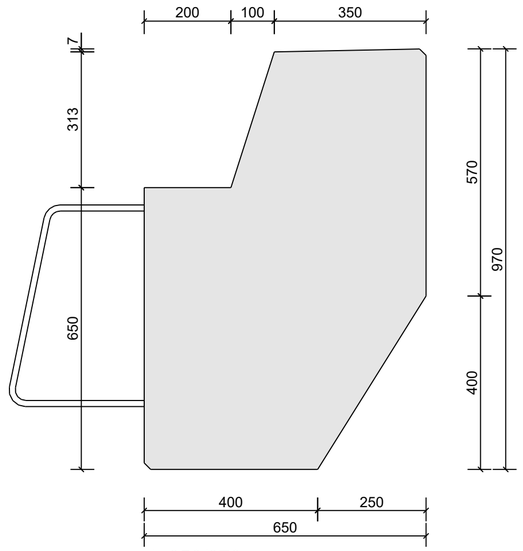

H=650/970

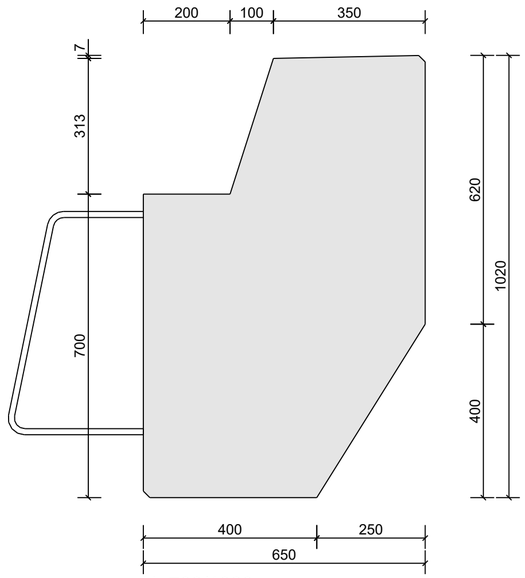

H=700/1020

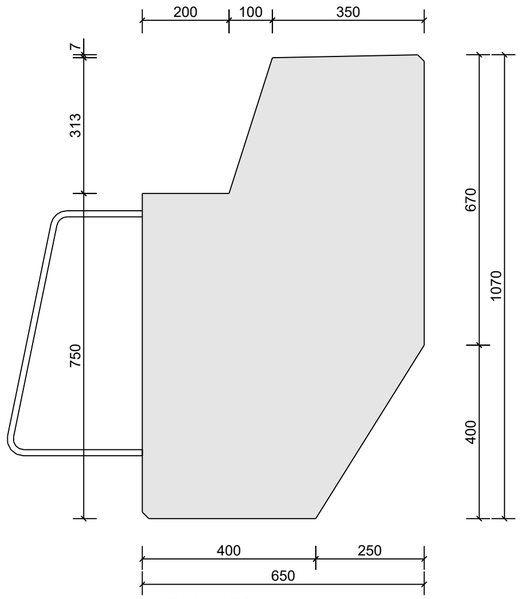

H=750/1070

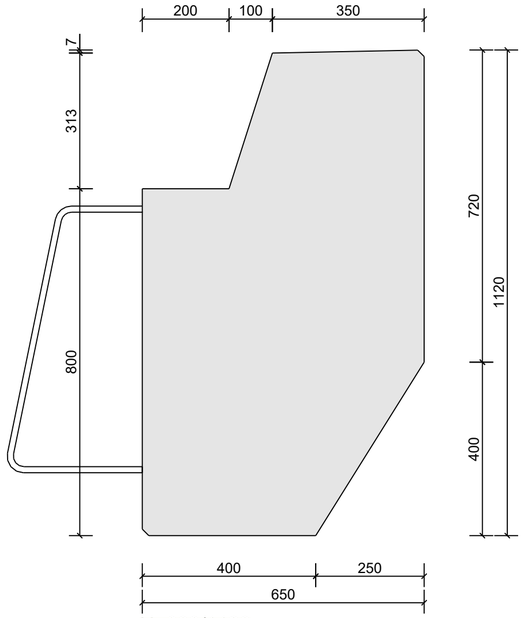

H=800/1120

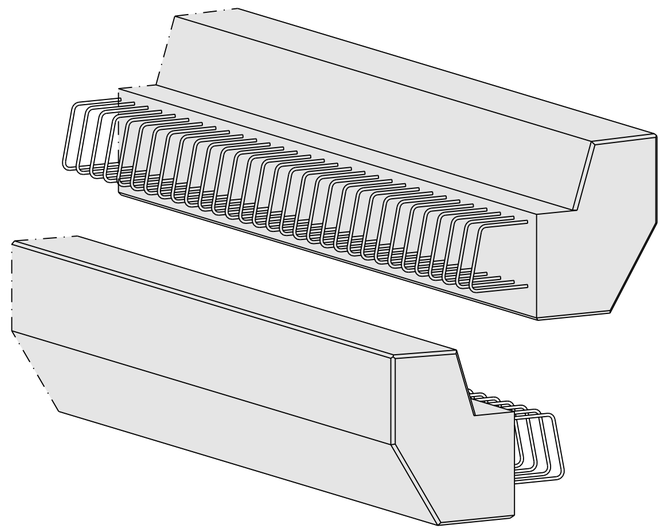

- Getekende vellingkanten 15x15mm
- Toog randligger niet getekend

Randliggertype:
ROC

romein

Tekla Structures

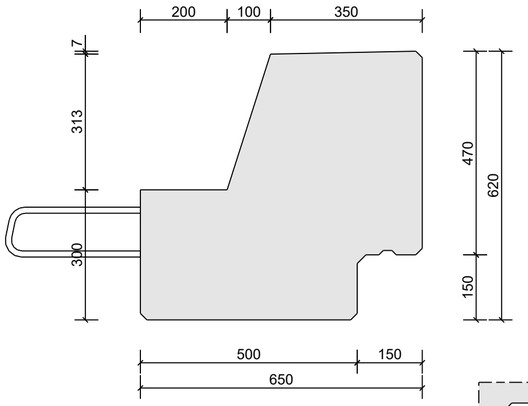

H=300/620

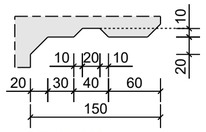

Detail a

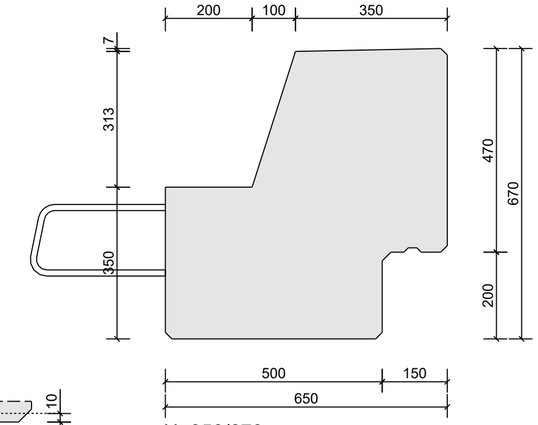

H=350/670

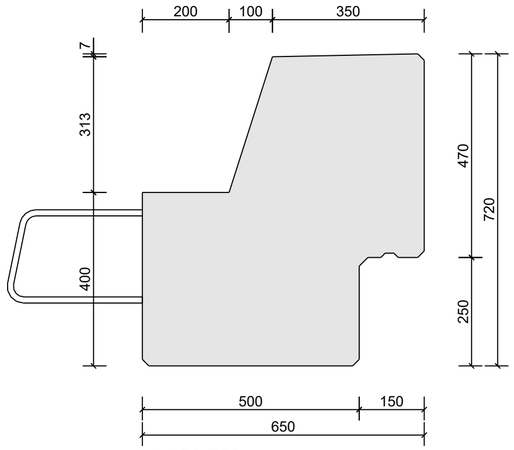

H=400/720

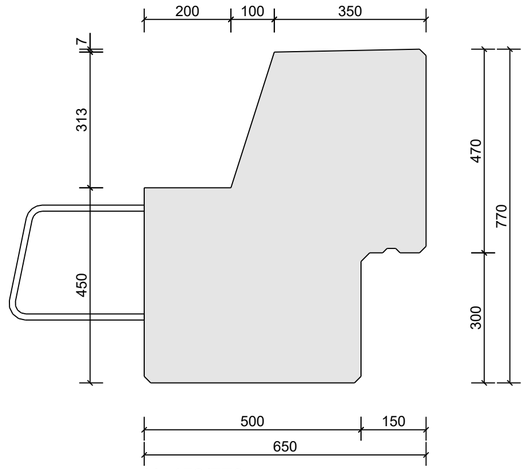

H=450/770

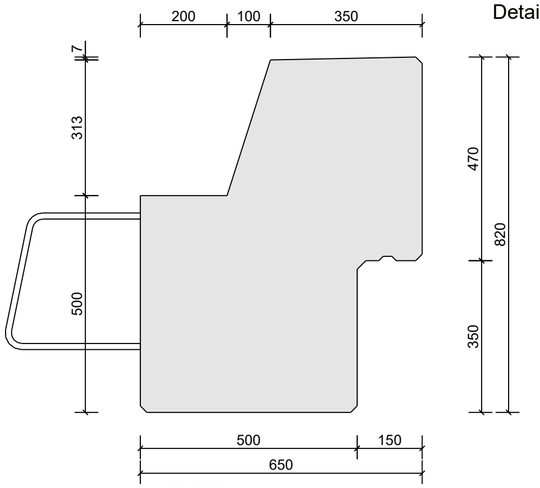

H=500/820

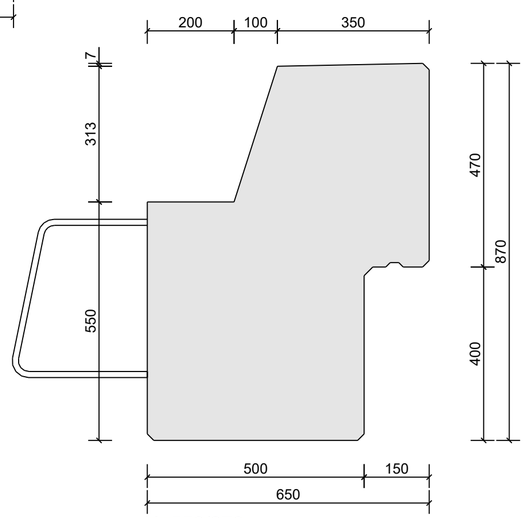

H=550/870

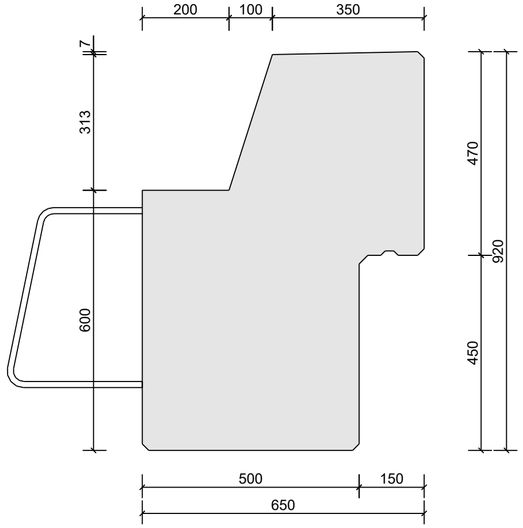

H=600/920

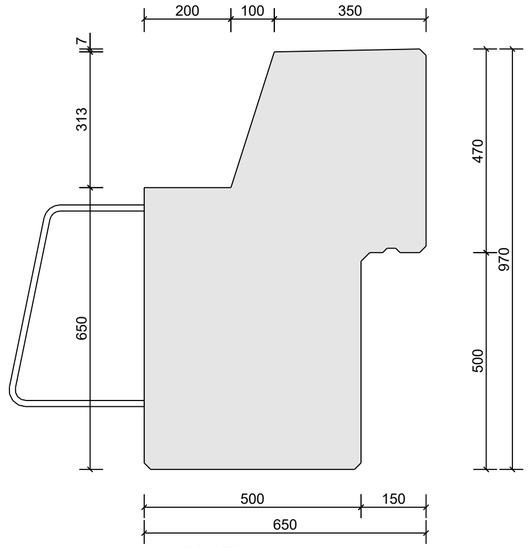

H=650/970

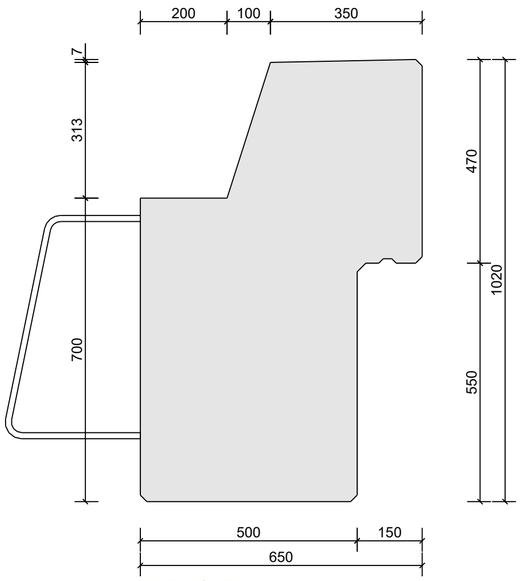

H=700/1020

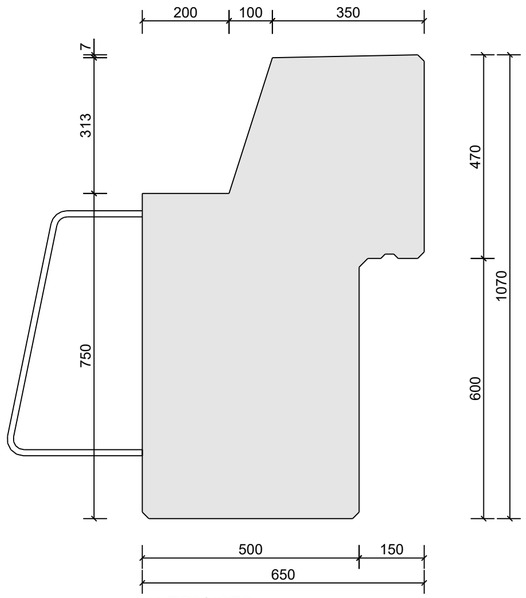

H=750/1070

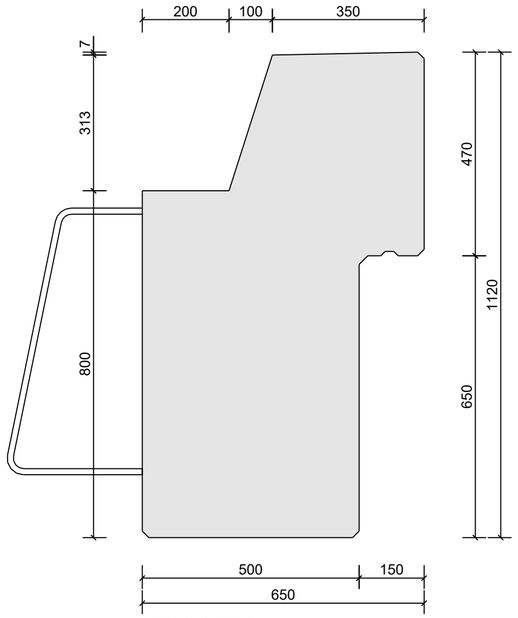

H=800/1120

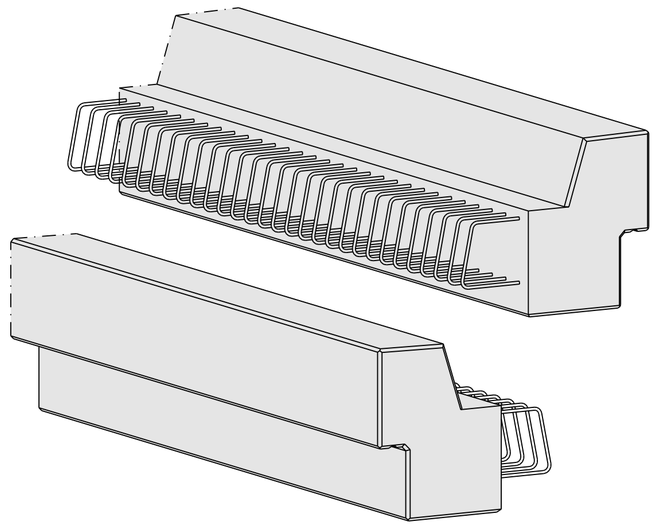

- Getekende vellingkanten 15x15mm
- Toog randligger niet getekend

Randliggertype:
ROD

romein

Tekla Structures